Connect only 2 wires.

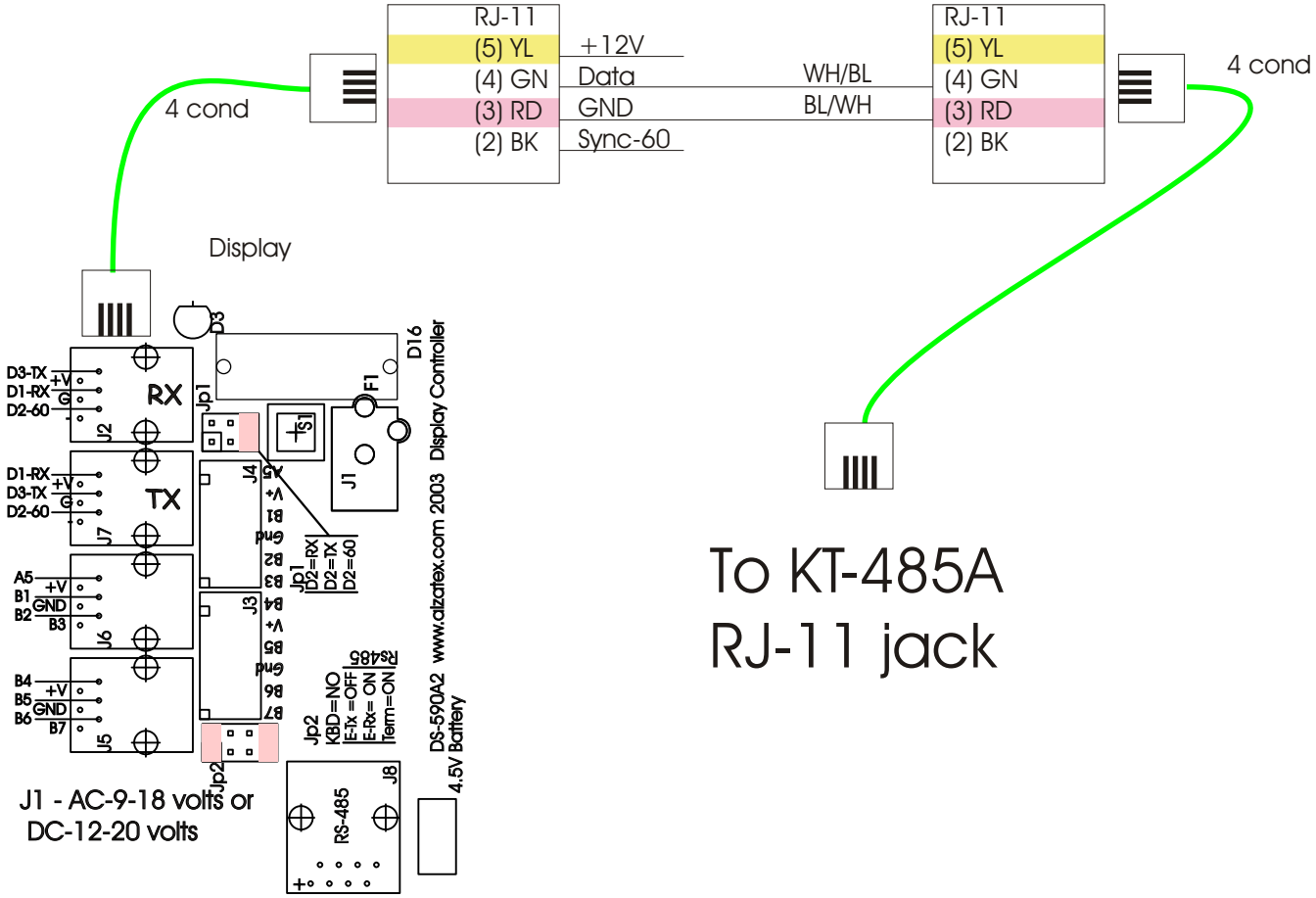

To KT-485A
RJ-11 jack

Install jumpers as
shown above.